M.479 | Bridge handle

Technopolymer

RoHS PA +130° -30°

MATERIAL
Glass-fibre reinforced polyamide based (PA) technopolymer, black colour, glossy finish.

SCREW-COVERS
- ECA.B: glass-fibre reinforced polyamide based (PA) technopolymer, in Elecolors colours, matte finish, press-fit assembly. Supplied, removable by a screwdriver.

Available also as accessory sold separately (see table).

STANDARD EXECUTIONS
- **M.479/150-8**: pass-through holes for cylindrical-head screws with hexagon socket. Screw covers to be press-fit assembled.
- **M.479/150 B-M8**: brass bosses, threaded holes. Screw covers supplied assembled.

TECHNICAL DATA
Tensile stress and impact strength: the values F1, F2, L1 and L2 indicated in the table were obtained during breaking tests carried out with the appropriate dynamometric equipment under the test conditions shown in the figure with ambient temperature.

ACCESSORIES ON REQUEST
- ECA.B: glass-fibre reinforced polyamide based (PA) technopolymer screw-covers, in Elecolors colours, matte finish, press-fit assembly (see table).

ELESA Original design

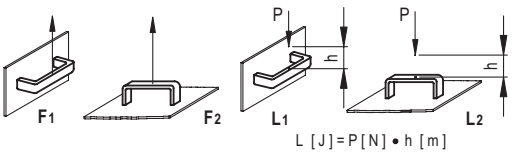

C1 RAL7021 | C2 RAL2004 | C3 RAL7035 | C4 RAL1021 | C5 RAL5024 | C6 RAL3000 | C17 RAL6017

ECA.B

Code	Description	Cap for
*29831-**	*ECA.B1-**	*M.479/150*

** Complete with colour index (C1, ..., C17).*

M.479/150-8 **M.479/150 B-M8**

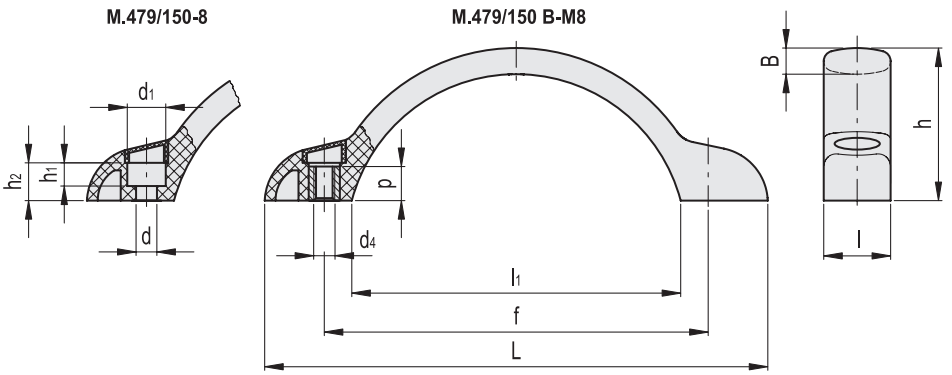

*Complete with colour index, example: 37461-C2 M.479/150-8-C2

C1 RAL7021 | C2 RAL2004 | C3 RAL7035 | C4 RAL1021 | C5 RAL5024 | C6 RAL3000 | C17 RAL6017

Code	Description	L	f	d4	d	d1	h	h1	h2	B	l	l1	p	F1 [N]	F2 [N]	L1 [J]	L2 [J]	⚖
37461-*	M.479/150-8-*	173	132±0.5	-	8.5	13.5	52.5	8.5	13	9	23	113	-	2100	2600	15	7	49
37466-*	M.479/150 B-M8-*	173	132±0.5	M8	-	-	52.5	-	-	9	23	113	12	2100	2600	15	7	57

elesa 3/2020

Models all rights reserved in accordance with the law. Always mention the source when reproducing our drawings and photos.